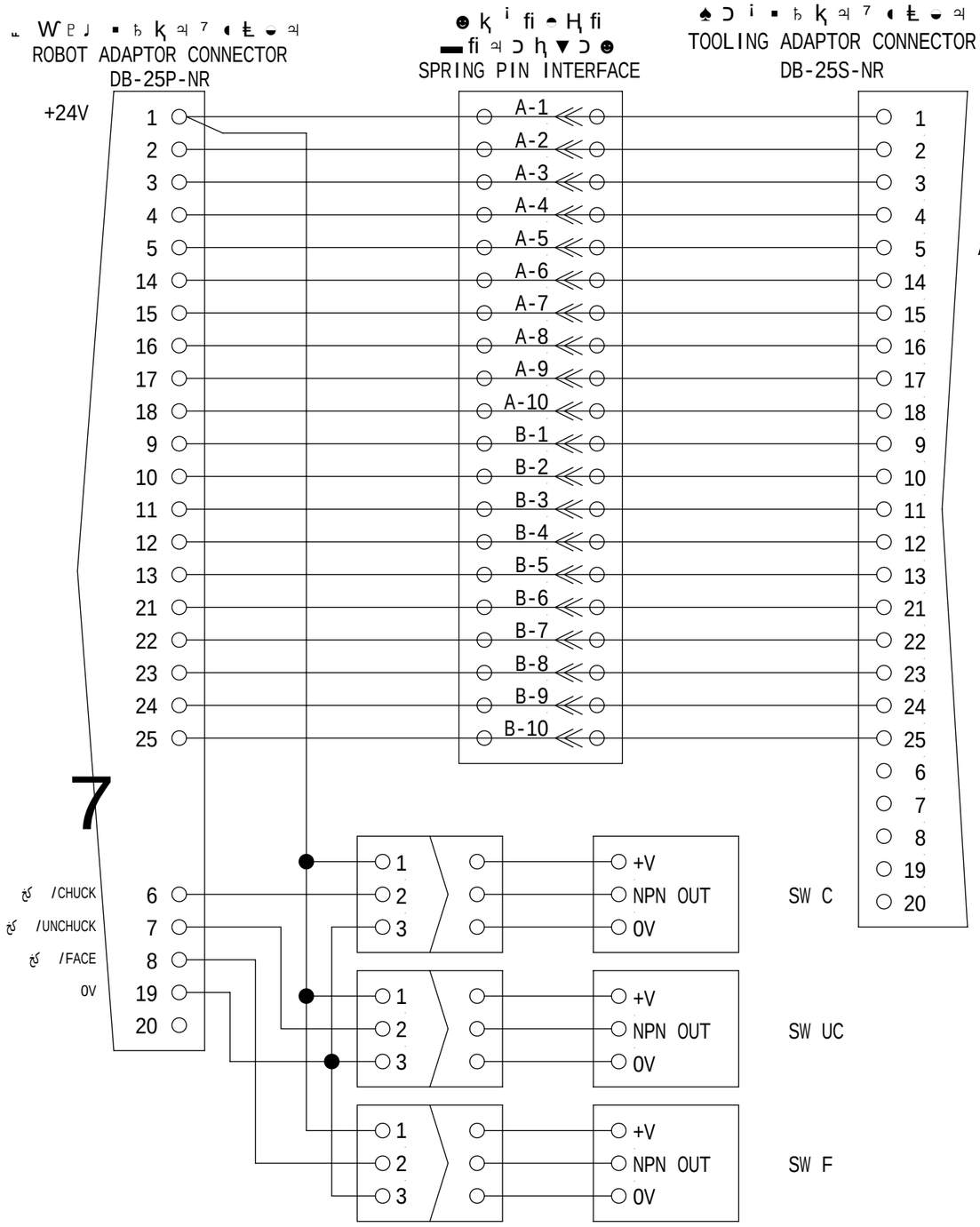

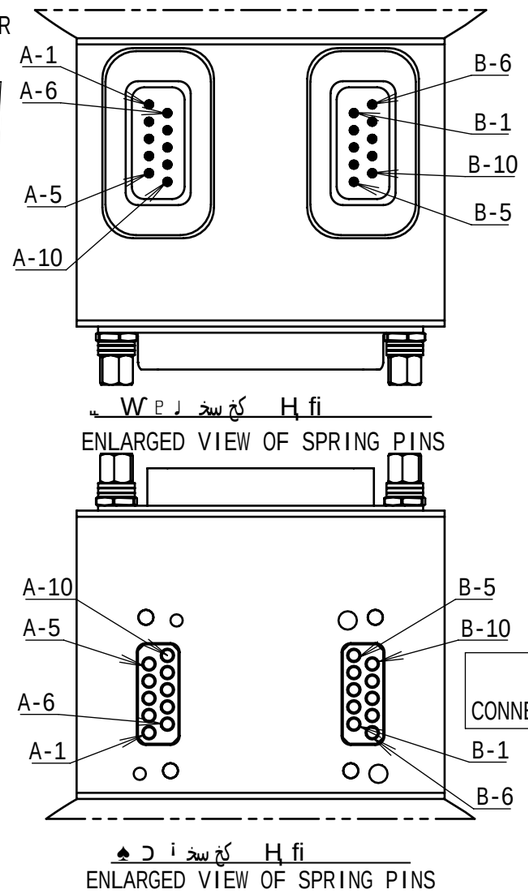

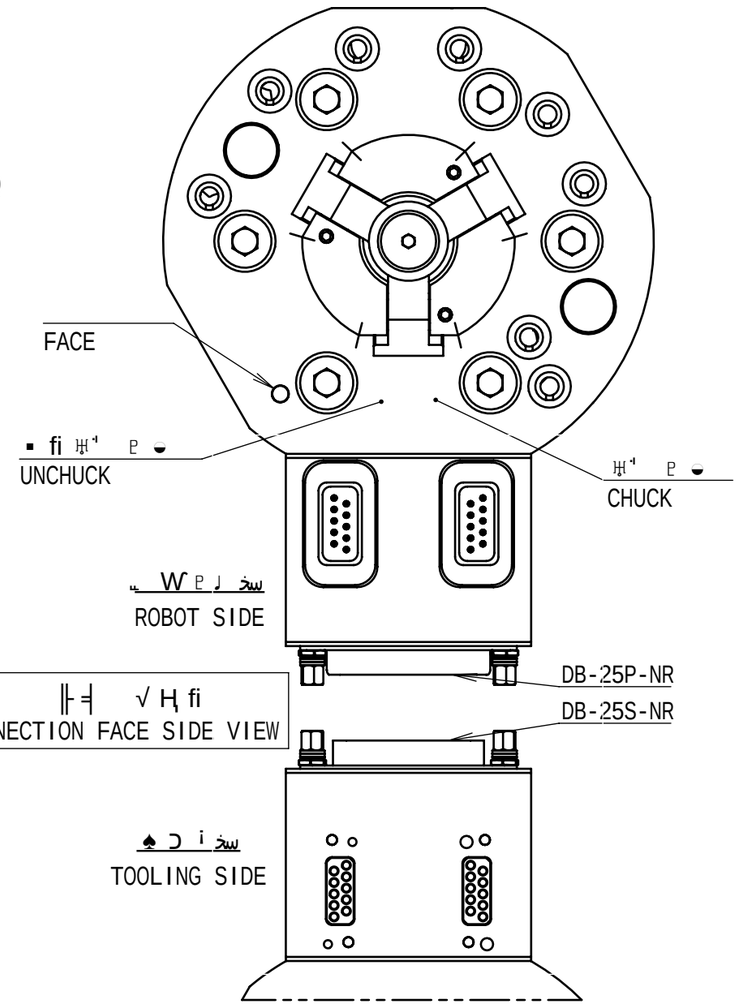

1. [illegible] N.O. [illegible]
2. DC24V [illegible]

NOTE
1.ALL THE SWITCHES ARE COMFORMED TO THE N.O.SPECIFICATION.
2.THIS MACHINE IS DC24V SINK OUTPUT TYPE.

ATC [illegible] ON OFF
THE ON/OFF STATUS FOR VARIOUSMODE OF THE ATC

	CHUCK SIGNAL	UNCHUCK SIGNAL	FACE SIGNAL
ATC (UNCHUCK)	OFF	ON	OFF
ATC (UNCHUCK)	OFF	ON	ON
ATC (CHUCK)	ON	OFF	ON

C: C:CHUCK
U: U:UNCHUCK
F: F:FACE

TITLE	NITTAOMEGA type S50-S (NPN) WIRING DIAGRAM(NPN OUTPUT)	
	AGG-W0001	
DOC No.	T20250325-8-0	DATE 2025/03/26

NITTA ニッタ株式会社 NITTA CORPORATION